MOUNTING HOLE DRAWING

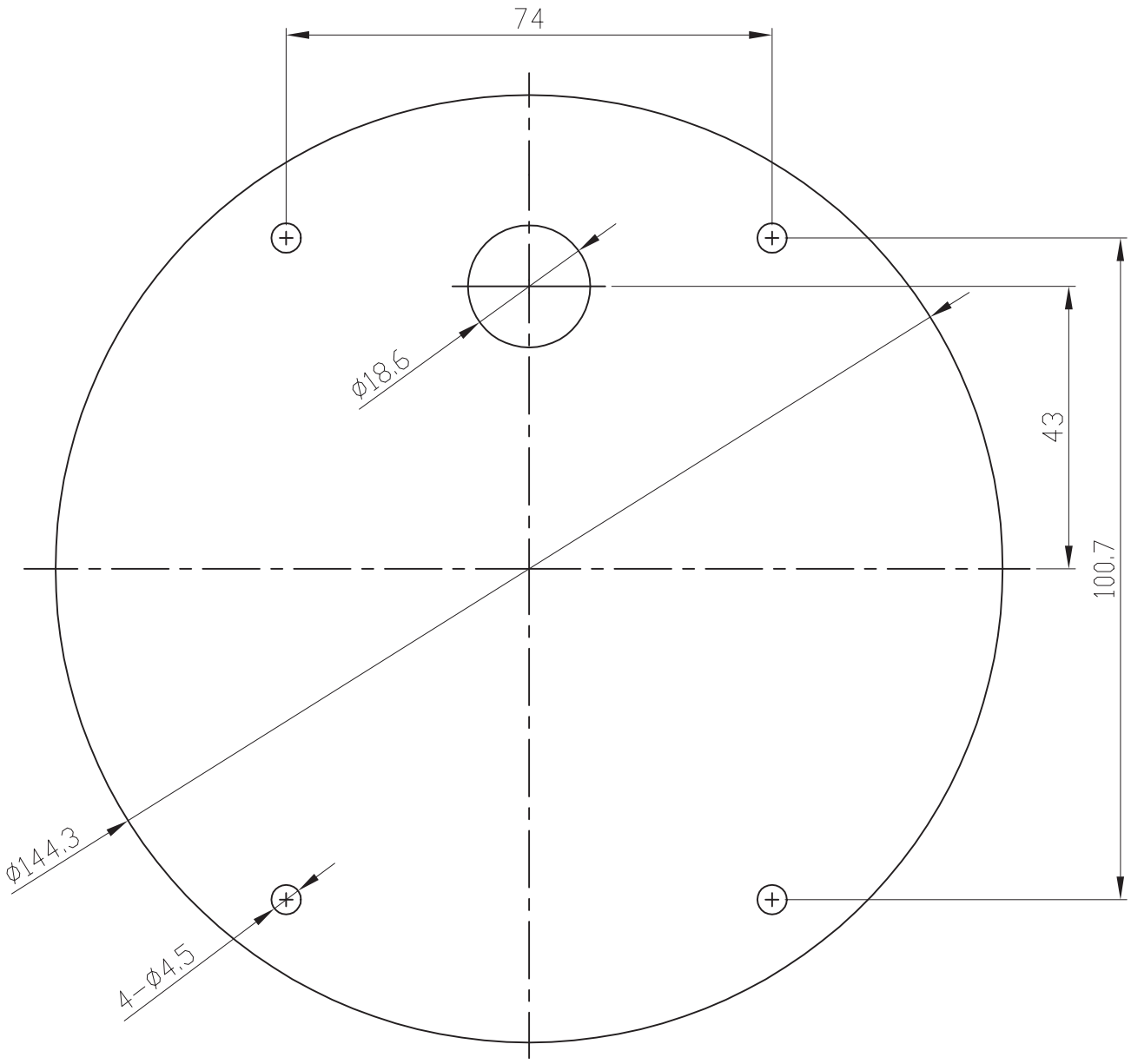

DRILL SIZE:ø1/4 INCH
DRILL DEPTH:1 INCH

UNIT:mm
VER.01